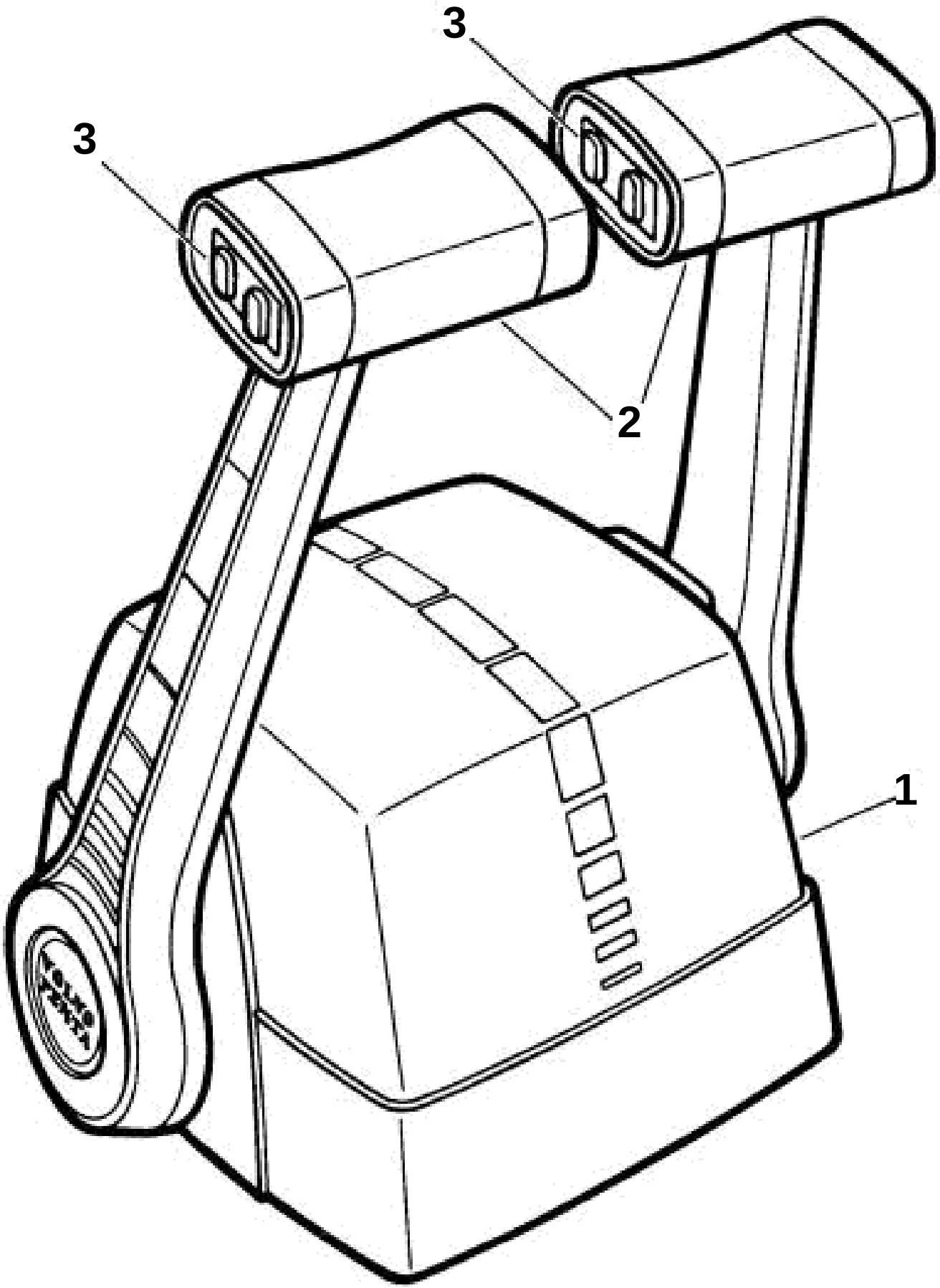
3
3
2
1

REMOTE CONTROL ASSEMBLY 3

REF	PART NO.	QTY	DESCRIPTION	NOTES
	3851094	1	Throttle control, Twin top mount with power trim & tilt	
1	3856858	1	· Cover	
2	3856856	1	· Cover	
3	3856853	1	· Switch	
	3856841	1	· Switch	Not shown
	3856854	1	· Switch	Not shown
	3856859	1	· Set	Not shown